City of Henderson

Department of Utility Services
Technical Services

Approved Materials List

Office Location
Henderson City Hall
240 Water Street
Henderson, Nevada 89015
(702) 267-5900

Mailing Address
City of Henderson
Department of Utility Services
PO Box 95050 MSC 125
Henderson, Nevada 89009-5050

Updated: April 2020

Table of Contents

Overview	3
Additions, Deletions, Modifications	4
Tapping Sleeves	5
Tapping Saddles	6
Water Meters	7
Water Meter Boxes & Lids	8
Fire Hydrants	9
Water Main Valves & Joint Restraint	10
Water Main Pipe	11
Water Main Fittings & Couplings	12
Valve Boxes & Lids	13
Backflow & Backflow Enclosures	14
Water Service Brass & Tubing	15
Sewer Main Pipe	16
Sewer Manhole Components & Lining Systems	17
Sewer Manhole & Sewer Pipe Accessories	18
Miscellaneous Items	19

City of Henderson Approved Materials List Overview

The design and construction of all water distribution and wastewater collection facilities within the City of Henderson must comply with the guidelines set forth in the Uniform Design and Construction Standards and the Design and Construction Standards for Wastewater Collection Systems along with the City of Henderson's Addenda for both documents. The Approved Materials List outlines all standard products and materials used in water distribution and wastewater collection systems, for pipe sizes up to and including 16-inches in diameter (water) and 15-inches in diameter (sewer).

All products and materials used in conjunction with water and sewer mains larger than this will be reviewed on a case-by-case basis and therefore shall be incorporated into the specific design of that system. It is not the intent of the Approved Materials List document to incorporate the types of products and materials used under those circumstances.

This document is not intended to replace or amend any adopted design and construction standards. Instead, the information contained within this document is provided as a replacement for product shop drawings that may be required for a developer project. Contact the Approved Materials List (AML) Committee for clarification where a conflict exists between this document and adopted design and construction standards.

All emergency temporary repairs will be completed at the discretion of the City of Henderson representative at the site. All permanent repairs will be completed in accordance with all applicable standards and the City's Approved Materials List.

A completed Approved Materials List New Product Application is required for any new product submittals to the AML Committee. The City will work with all parties involved to coordinate any product changes, additions or deletions but the City is not responsible for any supplier's standing inventory affected by revisions to this list. Any samples provided as part of the New Product Application process must be picked up by supplier within 60 days from approval/rejection of product

For questions regarding this document or inquiries on how a new product may be approved for inclusion on the Approved Materials List, please contact the AML Committee at 702-267-2514

The AML can be found at - http://www.cityofhenderson.com/development_services_center/applications_forms.php from this web page make the selection of Utility Services Forms.

CITY OF HENDERSON APPROVED MATERIALS LIST
ADDITIONS, DELETIONS, & MODIFICATIONS

Description	*Action*	*Date*	*Category*
Specified Fittings Gasketed Sewer Fittings	Added to List	Apr-2020	Manhole and Pipe Accessories
American Flow Control 2800-A, 2800-C	Added to List	Jan-2020	Tapping Sleeves
D&L A-1075, A-1366, A-1426	Added to List	Jan-2020	Sewer Components
Removed all DFW Boxes and Lids, due to recurring issues in the field.	Removed from the list	Dec-2019	Meter Box and Lid Options
Armorcast P6002001B, P6002002B, P6002003B Air Valve Housings	Added to List	Jul-2019	Miscellaneous Items
Romac Industries Macro HP Extended Range Coupling	Added to List for repairs only, new installs reviewed on case-by-case basis	Jul-2019	Water Main Coupling
Romac Industries Alpha & Alpha FC	Added to List for repairs only, new installs reviewed on case-by-case basis	Jul-2019	Water Main Coupling
Modified model number for Hubbell-Quartzite 2" lid from PG 1730 554450 to PG 1730 H60550, to accommodate the City's oval reader sensor.	Removed from the list	May-2019	Meter Box and Lid Options
Removed DFW 1324C Box and Lid, due to recurring issues in the field.	Removed from the list	May-2019	Meter Box and Lid Options
Quadex 100% Solids Epoxy for manhole lining, rehab	Added to List, requires partnering with local precast supplier (currently Olson Precast)	4/20149	Miscellaneous Items
Ford Meter Box 202BS tapping saddle	Approved for DIP	Jul-2018	Tapping Saddles
Removed Sigma Valve Box, as model 564-A doesn't seem to exist	Removed from the list	Jul-2018	Valve Cans & Lids
A.R.I. Combination Air Valve (D-060 & D-60-C-HF) 4" & 6"	Reinstated to the list	Apr-2018	Miscellaneous Items
A.R.I. Combination Air Valve (D-060 & D-60-C-HF) 4" & 6"	Removed from the list	Mar-2018	Miscellaneous Items
Vent-O-Mat - Combination Air Valve (RBX Series) 4"	Removed from the list	Mar-2018	Miscellaneous Items
Romac Industries, Inc. Style "CB" Sewer Service Saddle	Removed from the list	Feb-2018	Manhole & Pipe Accessories
Inserta Fittings (Fowler) Inserta Tee Service Saddle	Removed from the list	Feb-2018	Manhole & Pipe Accessories
Tyler Union 25# Water Lid with 4" Skirt	Added to List	Jan-2018	Valve Cans & Lids
Tyler Union Series 1000, 1500, 2000, 3000PP	Added to List	Jan-2018	Valves & Joint Restraint
Sigma PV-LOK Series PWP Bell Joint Restraint (4"-16")	Added to List	Jan-2018	Valves & Joint Restraint
Badger Meters FSAA-01 (all sizes)	Removed from the list	Feb-2018	Water Meters
Hersey Meters FM-3 (all sizes)	Removed from the list	Feb-2018	Water Meters
Metron-Farnier Spectrum 175, 260, 440 (all sizes)	Removed from the list	Feb-2018	Water Meters
Neptune Technology Group Tru/Flo (all sizes)	Removed from the list	Feb-2018	Water Meters
Neptune Technology Group Protectus III-SS (all sizes)	Removed from the list	Feb-2018	Water Meters
Oldcastle Precast Precast Manholes (48", 60", 72")	Added to the list	Nov-2017	Manhole Components
US Pipe TR Flex (6" - 16")	Added to the list	Nov-2017	Water Pipe
Ford Meter Box FC2W Wide Range Coupling (6" - 16")	Added to the list	Nov-2017	Fittings & Couplings
Ford Meter Box UFR 1500 Mechanical Joint Restraint (6" - 12")	Added to the list	Nov-2017	Valves & Joint Restraint
Cla-Val CRD-L (3/4" - 2")	Added to the list	Oct-2017	Miscellaneous Items
Accommodate new AMR lids	Revised model numbers	May-2017	Meter Box and Lid Options
National Casting Corporation NC-2531R	Revised model number	May-2017	Sanitary Sewer Manhole Options
Smith-Blair Top Bolt Coupling - Model 421	Added to the list	May-2017	Water Main Coupling Options
PowerSeal 341	Added to the list	Oct-2016	Tapping Saddle Options
Remove all 3" AVAR: 1. APCO/Willamette 147C; 2. Val-Matic 203C.2; 3. Vent-O-Mat 1631 RBX Series	Removed from the list	Mar-2016	Miscellaneous Items
Muller Company , LLC - Model A-2361 - (Ductile Iron Body)	Added to the list - replacing model A-2360	Mar-2016	Water Main Valves & Joint Restraint
Muller Company A-2360 (Cast Iron Body)	Removed from the list	Mar-2016	Water Main Valves & Joint Restraint
American Flow Control Waterous (Pacer WB67)	Allow for Vertical Show Configerations	Nov-2015	Fire Hydrant Options
Change "Pacific States" to "McWane Ductile"	Name change	Nov-2015	Water Main Pipes & Sewer Main Pipes
Team Industrial Services - Inserta Valve", Model RW-Gate, 4" to 12"	Suspended from AML	Nov-2015	Water Main Valves & Joint Restraint
U.S. Pipe TR-Flex (Gasket)	Suspended from AML	Nov-2015	Water Main Valves & Joint Restraint
Smith-Blair Model 111 Cam-Lock (DI: 4"-12")	Added to the list	Oct-2015	Water Main Valves & Joint Restraint
Smith-Blair Model 120 Cam-Lock (PVC: 4"-16")	Added to the list	Oct-2015	Water Main Valves & Joint Restraint
Smith-Blair Model 115 MJ Fittings & Push-On Joints PVC: 4"-16" & DI: 4"-12"	Added to the list	Jul-2015	Water Main Valves & Joint Restraint
Smith-Blair Model 165 Bell & Spigot Joints PVC: 4"-16" & DI: 4"-12"	Added to the list	Jul-2015	Water Main Valves & Joint Restraint
A.R.I. Combination Air Valve (D-060 & D-60-C-HF)	Added to the list	Jul-2015	Miscellaneous Items
Tigre - ADS USA	Added to the list	Jul-2015	Sewer Main Pipe Options
National Casting Corporation NC-2531	Added to the list	Jul-2015	Sanitary Sewer Manhole Options
Change "Halstead" to "Wieland Copper Products, LLC"	Name change	Mar-2015	Water Service Tubing Options
Romac Series 600 Pipe Restraint	Added to the list	Nov-2014	Water Main Valves & Joint Restraint
Star Pipe Products - Star Flange 3200 (DIP) & 4200 (PVC)	Added to the list	Oct-2014	Water Main Valves & Joint Restraint
Jandec Marketing, LLC	Removed from the list	Sep-2014	Backflow Enclosure Options
DFW Plastics, Inc.	Added to the list	Sep-2014	Meter Box and Lid Options
Delete all 4-inch Combination Fire and Domestic Meters and update application for all meters	Updated / Removed from the list	Apr-2014	Water Meter Options
Manufacture changed from Strongwell to Hubbell	Updated List	Mar-2014	Meter Box and Lid Options
Warren Epoxy and Master Meter Ultrasonic Meter (3"-12")	Added to the list	Mar-2014	Water Meter Options & Manhole Lining Systems
Polymer Manholes	Added to the list	Aug-2013	Manhole Components
PlumbShield Plastic Coated Copper Tubing - 1/4"-2"	Added to the list	Jun-2013	Water Service Brass & Tubing
Badger Meters Model FSAA-01	Added to the list	Jun-2013	Water Meters
Polyethylene Water Service Tubing (1" - 2")	Removed from the list	Apr-2012	Water Service Tubing Options
Turbine, Compound and Fire Service Meters - Omni T2, C2 and F2 - 8"-10"	Added to the list	Jan-2012	Water Meters
East Jordan Iron Works, Inc.- Watermaster Fire Hydrant -5CD250	Added to the list - replacing model 5BR250	Jul-2011	Fire Hydrants
Quality Rubber Company -Gripper Gaskets -Series 3"-24"(Boltless restraint for DIP, valves, fittings)	Added to the list	Jul-2011	Water Main Valves & Joint Restraint
Star Pipe Co., Inc. – Stargrip Joint Restraint – Model 4000 – C900 4" – 12"	Added to the list	Dec-2010	Water Main Valves & Joint Restraint
3M – 4" Ball Marker – 1404-XR – U/G Utility Marking	Added to the list	Dec-2010	Miscellaneous Items
Carson Industries – Meter Box / Lid – H1730-12 – Polymer Concrete	Added to the list	Dec-2010	Meter Box and Lid Options
Carson Industries – Meter Box / Lid – H1324-12 – Polymer Concrete	Added to the list	Dec-2010	Meter Box and Lid Options
Team Industrial Services - Inserta Valve", Model RW-Gate, 4" to 12"	Added to the list	Mar-2010	Water Main Valves & Joint Restraint
Sensus Metering Systems, Omni, f2, 4" to 6"	Added to the list	Mar-2010	Water Meters
EBAA Iron – PVC Joint Restraint, 2000PV, C900 & C9 05, 4" to 12"	Added to the list	Mar-2010	Water Main Valves & Joint Restraint
EBAA Iron – PVC Joint Restraint, 1600, C900, 4" to 12"	Added to the list	Mar-2010	Water Main Valves & Joint Restraint
EBAA Iron – PVC Joint Restraint, 2800, C905, 14"	Added to the list	Mar-2010	Water Main Valves & Joint Restraint
JM Eagle Pipe	Removed from list	Feb-2010	Water Main Pipe
PVC. Sewer Pipe Fittings	Added to the list	Dec-2009	Sewer
D & L Foundry & Supply M-8045-3	Added to the list	Oct-2009	Valve Cans & Lids
"Sensus" Model "C2", sizes 3" – 6" Metering Systems	Added to the list	Jun-2009	Water Meters
"Sensus" Model "T2", sizes 3" – 6" Metering Systems	Added to the list	Jun-2009	Water Meters
"Sensus" Model "SRH", sizes 3" – 6" meters	Removed from the list	Aug-2009	Water Meters
Expanded Application Categories	Revised and/or added	Dec-2008	Water Meters
Hersey 8x2 & 10x2 meter	Removed from the list	Dec-2008	Water Meters
Metron 6" & 8" Enduro meter	Removed from the list	Dec-2008	Water Meters
Fire hydrant guidelines added	Added web link to COH fire hydrant guidelines.	Dec-2008	Fire Hydrants
Fire hydrant suspended from AML - Kennedy K-81A	Suspended from AML	Dec-2008	Fire Hydrants
Griffin Pipe Products Co. Ductile Iron Water Pipe	Added to the list	Oct-2008	Water Main Pipe
North American Pipe Corp. C-900 PVC Pipe	Added to the list	Oct-2008	Water Main Pipe
Ford Meter Box 2" Blow-off	Added to the list	Oct-2008	Miscellaneous Items
Jensen Precast G5 Valve Box	Added to the list	Oct-2008	Miscellaneous Items
COR+GARD Epoxy Manhole Lining System	Added to the list	Oct-2008	Sewer manhole components & lining systems
C-900 Required at 20 feet depth of cover	Revised the requirement for C-900 pipe from 15 feet to 20 feet.	Dec-2008	Sewer Main Pipe
North American Pipe Corp. SDR-35 Sewer Pipe	Added to the list	Dec-2008	Sewer Main Pipe
Griffin Pipe Products Co. Ductile Iron Sewer Pipe	Added to the list	Dec-2008	Sewer Main Pipe
McWane Sure Stop 350 Joint Restraint Gasket	Added to the list	Dec-2008	Water Main Valves & Joint Restraint
Maximum size change	Revise maximum size for all products from 20" to 16"	Oct-2007	All
Pipeline Products – Air-Vac Cover	Added to the list	Sep-2007	Miscellaneous Items
Romac - RomaGrip and Sigma - One-Lok	Added to the list	Sep-2007	Joint Restraint
Vent-O-Mat - Combination Air Valve	Added to the list	Sep-2007	Miscellaneous Items

CITY OF HENDERSON APPROVED MATERIALS LIST
TAPPING SLEEVE OPTIONS

All tapping sleeves shall have a full circumferential gasket.
All carbon steel tapping sleeves shall be fusion-bonded epoxy coated.
The diameter of asbestos cement (AC) pipe varies among manufacturers.
It is important to measure the (AC) pipe diameter at the point where the sleeve will be installed.

		APPLICATION									
Manufacturer	**Model Number**	**C-900 PVC**	**C-905 PVC**	**Ductile**	**Cast Iron**	**Asbestos Cement**	**Tapping Pipe**	**Tap Size**	**MJ Style**	**Approval Date**	**Manufacturer Web Link**
American Flow Control	2800-C			●			Up To 24"	Up to Size on Size	●	Dec-2019	http://www.acipco.com/afc
American Flow Control	2800-A					●	Up To 24"	Up to Size on Size	●	Dec-2019	http://www.acipco.com/afc
Ford Meter Box Co.	FTSS	●		●	●	●	Up To 12"	Max 75% of pipe		Apr-1995	http://www.fordmeterbox.com
JCM Industries	JCM 432	●		●	●	●	Up To 24"	Max 75% up to 8"		May-2019	http://www.jcmindustries.com
Mueller Company, LLC	H-615	●		●	●		Up To 12"	Up to Size on Size	●	Apr-1995	http://www.muellercompany.com
Mueller Company, LLC	H-619					●	Up To 12"	Up to Size on Size	●	Apr-1995	http://www.muellercompany.com
Power Seal	3490 AS	●		●	●	●	Up To 24"	Max 75% of pipe		Jan-2001	http://www.powerseal.com
Romac Industries, Inc.	FTS425	●		●	●	●	Up To 24"	Up to Size on Size	●	May-2007	http://www.romac.com
Romac Industries, Inc.	SST III	●		●	●	●	Up To 24"	Max 75% of pipe		Apr-1995	http://www.romac.com
Smith-Blair, Inc.	623	●	●	●	●	●	Up To 24"	Up to Size on Size	●	May-2004	http://www.smith-blair.com
Smith-Blair, Inc.	664	●		●		●	Up To 24"	Max 75% of pipe		Jan-2001	http://www.smith-blair.com
Smith-Blair, Inc.	665	●		●	●	●	Up To 24"	Max 75% of pipe		Oct-2006	http://www.smith-blair.com

CITY OF HENDERSON APPROVED MATERIALS LIST

TAPPING SADDLE OPTIONS

All tapping saddles are required to be a double bolt style saddle.
This can either be a single strap or a double strap.
Bronze blades or straps are approved for ductile iron, cast iron and AC pipe only.
Any saddle to be used on a main larger than 20 inches will be a case-by-case approval.

		APPLICATION							
Manufacturer	**Model Number**	**C-900 PVC**	**C-905 PVC**	**Ductile**	**Cast Iron**	**Asbestos Cement**	**Tapping Pipe**	**Approval Date**	**Manufacturer Web Link**
A. Y. McDonald	3856	●					Up To 12"	May-2004	http://www.aymcdonald.com
A. Y. McDonald	3846	●					Up To 12"	May-2004	http://www.aymcdonald.com
Ford Meter Box Co.	202BS	●	●	●			Up To 20"	Apr-1995	http://www.fordmeterbox.com
Ford Meter Box Co.	202B			●	●	●	Up To 20"	Apr-1995	http://www.fordmeterbox.com
Jones	J-979			●	●	●	Up To 12"	Apr-1995	http://www.jamesjones.com
Jones	J-969	●					Up To 12"	Apr-1995	http://www.jamesjones.com
Mueller Company, LLC	BR2B			●	●	●	Up To 16"	Apr-1995	http://www.muellercompany.com
Mueller Company, LLC	BR2S	●		●	●	●	Up To 16"	Apr-1995	http://www.muellercompany.com
PowerSeal	3409	●		●		●	Up To 16"	Oct-2006	http://www.powerseal.com
PowerSeal	3417AS	●	●	●	●	●	Up To 16"	Oct-2016	http://www.powerseal.com
Romac Industries, Inc.	202BS	●	●	●	●	●	Up To 16"	Apr-1995	http://www.romac.com
Smith-Blair, Inc.	325	●		●			Up To 12"	May-2004	http://www.smith-blair.com

CITY OF HENDERSON APPROVED MATERIALS LIST
WATER METER OPTIONS

ALL meters shall read in cubic feet and have encoded registers. All water meters 2 inches and smaller will be supplied and installed by the City of Henderson.
All water meters 3 inches and larger will be supplied and installed by the Contractor. Non-rising stem valves only are to be used in any meter vault.
ALL Neptune Protectus III Combination Fire and Domestic meters shall include Stainless Steel Strainers and Valve Covers.
Non-rising stem valves only are to be used in any meter vault.

			APPLICATION										
Meter Type	**SIZE**	**Model**	**Domestic - Multi-Family**	**Domestic - Light Commercial**	**Domestic - Heavy Commercial & Industrial**	**Domestic - School**	**Domestic - Hotel & Casino**	**Combination Fire & Domestic Low Domestic Flow (School, Church, Office)**	**Combination Fire & Domestic High Domestic Flow (Multi-Family, Hospital, Industrial)**	**Irrigation**	**UDACS Plate Reference**	**Approval Date**	**Manufacturer Web Link**
Turbine with Strainer													
Sensus	3"	OMNI T2			●		●			●	52	Jun-2009	http://www.sensus.com
Sensus	4"	OMNI T2			●		●			●	52	Jun-2009	http://www.sensus.com
Sensus	6"	OMNI T2			●		●			●	52	Apr-1995	http://www.sensus.com
Sensus	8"	OMNI T2			●		●			●	52	Apr-1995	http://www.sensus.com
Sensus	10"	OMNI T2			●		●			●	52	Apr-1995	http://www.sensus.com
Neptune	3"	HP			●		●			●	52	Oct-2006	http://www.neptunetg.com
Neptune	4"	HP			●		●			●	52	Oct-2006	http://www.neptunetg.com
Neptune	6"	HP			●		●			●	52	Oct-2006	http://www.neptunetg.com
Neptune	8"	HP			●		●			●	52	Oct-2006	http://www.neptunetg.com
Neptune	10"	HP			●		●			●	52	Oct-2006	http://www.neptunetg.com
Compound with Strainer													
Neptune	3"	TRU/FLO	●	●		●	●				50	Oct-2006	http://www.neptunetg.com
Neptune	4"	TRU/FLO	●	●		●	●				50	Oct-2006	http://www.neptunetg.com
Neptune	6"	TRU/FLO	●	●		●	●				50	Oct-2006	http://www.neptunetg.com
Sensus	3"	OMNI C2	●	●		●	●				50	Jun-2009	http://www.sensus.com
Sensus	4"	OMNI C2	●	●		●	●				50	Jun-2009	http://www.sensus.com
Sensus	6"	OMNI C2	●	●		●	●				50	Jun-2009	http://www.sensus.com
Combination Fire & Domestic													
Sensus	6"	OMNI F2						●	●		55	Apr-1995	http://www.sensus.com
Sensus	8"	OMNI F2						●	●		55	Mar-2010	http://www.sensus.com
Sensus	10"	OMNI F2						●	●		55	Mar-2010	http://www.sensus.com
Ultrasonic Meter													
Master Meter	3"	Octave Ultrasonic Meter	●	●	●	●	●				54	Mar-2014	http://www.mastermeter.com
Master Meter	4"	Octave Ultrasonic Meter	●	●	●	●	●				54	Mar-2014	http://www.mastermeter.com
Master Meter	6"	Octave Ultrasonic Meter	●	●	●	●	●	●	●		54	Mar-2014	http://www.mastermeter.com
Master Meter	8"	Octave Ultrasonic Meter	●	●	●	●	●	●	●		54	Mar-2014	http://www.mastermeter.com
Master Meter	10"	Octave Ultrasonic Meter	●	●	●	●	●	●	●		54	Mar-2014	http://www.mastermeter.com
Master Meter	12"	Octave Ultrasonic Meter	●	●	●	●	●	●	●		54	Mar-2014	http://www.mastermeter.com

All meter box top sections and lid components shall be an approved material with a 20K or Tier 15 rating.
All lids are required to have a manufacturer casting stamp and have a manufacturer label on the inside wall of the box.
All 3/4" and 1" meters require a 1" meter box and 1 1/2" and 2" meters require a 2" meter box. All lids shall be stamped "Water".
Touch read hole size shall be 1 3/4" in diameter. The area around the touch read hole shall be recessed 1/8" to a diameter of 4 1/8" centered on the center of the touch read hole.

APPLICATION

Manufacturer	Model/Part Number	Component	Lid Size	Lid Markings	Approval Date	Manufacturer Web Link
Armorcast	A6001946PCX12	1" Box			Jan-2001	http://www.armorcastprod.com
Armorcast	A6001640PCX12	2" Box			Jan-2001	http://www.armorcastprod.com
CDR	WB03-1324-12	1" Box			Oct-2006	http://www.cdrsystems.com
CDR	WB03-1730-12	2" Box			Oct-2006	http://www.cdrsystems.com
Christy	SYN1324X12	1" Box			Oct-2006	http://www.christyconcrete.com
Christy	SYN1730X12	2" Box			Oct-2006	http://www.christyconcrete.com
Jensen Precast	100008589	1" Box			Oct-2006	http://www.jensenprecast.com/
Jensen Precast	100002034	2" Box			Oct-2006	http://www.jensenprecast.com/
Hubbell - Quazite*	PG1324B531	1" Box			Oct-2006	http://www.hubbellpowersystems.com
Hubbell - Quazite*	PG1730B568	2" Box			Oct-2006	http://www.hubbellpowersystems.com
Armorcast	A6001969-H16[1]	1" Lid	23 1/4" x 13 3/4"	WATER	Jan-2001	http://www.armorcastprod.com
Armorcast	A6001947T-H16[1]	2" Lid	30 1/2" x 17 1/2"	WATER	Jan-2001	http://www.armorcastprod.com
CDR	WC02-1324-02	1" Lid	23 1/4" x 13 3/4"	WATER	Oct-2006	http://www.cdrsystems.com
CDR	WC02-1730-02	2" Lid	30 1/2" x 17 1/2"	WATER	Oct-2006	http://www.cdrsystems.com
Christy	SYN1324P	1" Lid	23 1/4" x 13 3/4"	WATER	Oct-2006	http://www.christyconcrete.com
Christy	SYN1730P	2" Lid	30 1/2" x 17 1/2"	WATER	Oct-2006	http://www.christyconcrete.com
Jensen Precast	100005027 [1]	1" Lid	23 1/4" x 13 3/4"	WATER	Oct-2006	http://www.jensenprecast.com/
Jensen Precast	100005030 [1]	2" Lid	30 1/2" x 17 1/2"	WATER	Oct-2006	http://www.jensenprecast.com/
Hubbell - Quazite*	PG 1324 H59450[1]	1" Lid	23 1/4" x 13 3/4"	WATER	Oct-2006	http://www.hubbellpowersystems.com
Hubbell - Quazite*	PG 1730 H60550[1]	2" Lid	30 1/2" x 17 1/2"	WATER	Oct-2006	http://www.hubbellpowersystems.com

Lid Configuration

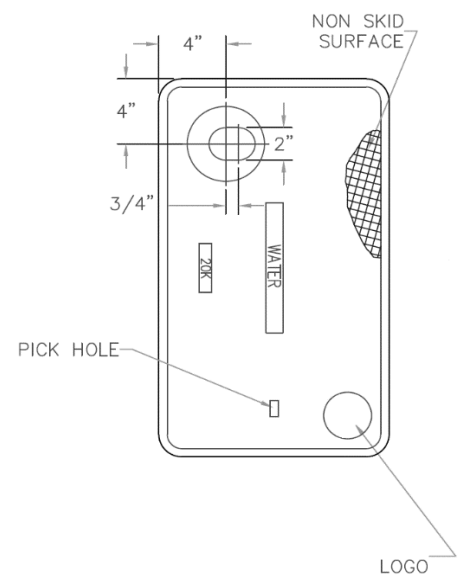

*Formerly Strongwell

[1]Accommodates AMR Sensor

CITY OF HENDERSON APPROVED MATERIALS LIST

FIRE HYDRANT OPTIONS

The main valve is 5 1/4".
The pumper nozzle is 4" Higbee Cut National Standard Thread.
The hose nozzle is 2 1/2" Higbee Cut National Standard Thread.
All hydrants shall have a 1 1/8" operating nut.
Some hydrants may be approved for a vertical shoe configuration.
This approval will be a project specific approval.
Any fire hydrant for new construction must be a new hydrant.
The relocation of existing hydrants is not approved within the City.

APPLICATION

Manufacturer	Model Number	Configuration	Vertical Shoe Configuration	Approval Date	Manufacturer Web Link
American Flow Control Waterous	Pacer	WB67	Yes	Apr-1995	http://www.acipco.com/afc
Clow	Medallion	F-2546 LVD	Yes	Apr-1995	http://www.clowvalve.com
East Jordan Iron Works	5CD250			Oct-2006	http://www.ejiw.com
Mueller	Super Centurion 250	A-423	Yes	Apr-1995	http://www.muellercompany.com

CITY OF HENDERSON APPROVED MATERIALS LIST
WATER MAIN VALVE OPTIONS
The minimum water main valve size is 6 inch.
All gate valves shall be resilient seated wedge type, fusion bonded epoxy coated
to ANSI/AWWA C550. Gate valves shall comply with AWWA C509 or C515.
No butterfly valves shall be used for normal distribution applications.

APPLICATION

Manufacturer	Model Number	Type	Size	Approval Date	Manufacturer Web Link
American Flow Control	2500 Series	Gate	6" - 16"	Jan-2001	http://www.acipco.com/afc
Clow	2640	Gate	6" - 12"	Apr-1995	http://www.clowvalve.com
Clow	2639	Gate	6" - 12"	Apr-1995	http://www.clowvalve.com
Clow	2638	Gate	6" - 16"	Apr-1995	http://www.clowvalve.com
East Jordan Iron Works	Flowmaster Series	Gate	6" - 16"	Mar-2005	http://www.ejiw.com
Kennedy	8000 Series	Gate	6" - 12"	Apr-1995	http://www.kennedyvalve.com
M&H	7000 Series	Gate	6" - 12"	Apr-1995	http://www.mh-valve.com
M&H	4067	Gate	6" - 12"	Apr-1995	http://www.mh-valve.com
Mueller Company, LLC	A-2361	Gate	6" - 16"	Mar-2016	http://www.muellercompany.com
Waterous	500 Series	Gate	6" - 12"	Apr-1995	http://www.acipco.com/afc

CITY OF HENDERSON WATER MAIN JOINT RESTRAINT OPTIONS
Ductile Iron pipe and PVC are the only pipe materials approved within the City for any joint restraint system.
Gasket-type joint restraint systems are approved for straight runs of ductile iron pipe only,
and are not to be used at any fitting or valve joint.

EBAA Iron	MEGALUG 1100	Mechanical	4" - 16"		http://www.ebaa.com
EBAA Iron	2000PV (PVC)	Mechanical	4" - 12"	Mar-2010	http://www.ebaa.com
EBAA Iron	1600 (PVC)	Mechanical	4" - 12"	Mar-2010	http://www.ebaa.com
EBAA Iron	2800 (PVC)	Mechanical	14"	Mar-2010	http://www.ebaa.com
Ford Meter Box	Uni-Flange 1400	Mechanical	4" - 16"		http://www.fordmeterbox.com
Ford Meter Box	UFR1500	Mechanical	6" - 16"	Jun-2017	http://www.fordmeterbox.com
Romac Industries, Inc.	RomaGrip	Mechanical	4" - 16"	Sep-2007	http://www.romac.com
Romac Industries, Inc.	600 Series	Mechanical	6" - 12"	Nov-2014	http://www.romac.com
Sigma	One-Lok	Mechanical	4" - 16"	Sep-2007	http://www.sigmaco.com
Sigma	PV-LOK Series PWP	Mechanical	4" - 16"	Jan-2018	http://www.sigmaco.com
Smith-Blair, Inc.	Model 111 Cam-Lock (DI)	Mechanical	4" - 12"	Oct-2015	www.smith-blair.com
Smith-Blair, Inc.	Model 120 Cam-Lock (PVC)	Mechanical	4" - 16"	Oct-2015	www.smith-blair.com
Smith-Blair, Inc.	Model 115 Bell-Lock (DI)	Mechanical	4" - 12"	Jul-2015	www.smith-blair.com
Smith-Blair, Inc.	Model 115 Bell-Lock (PVC)	Mechanical	4" - 16"	Jul-2015	www.smith-blair.com
Smith-Blair, Inc.	Model 165 Bell-Lock (DI)	Mechanical	4" - 12"	Jul-2015	www.smith-blair.com
Smith-Blair, Inc.	Model 165 Bell-Lock (PVC)	Mechanical	4" - 16"	Jul-2015	www.smith-blair.com
Star Pipe Products	Star Flange Series 3200 (DI)	Mechanical	6" - 12"	Oct-2014	http://www.starpipeproducts.com
Star Pipe Products	Star Flange Series 4200 (PVC)	Mechanical	6" - 12"	Oct-2014	http://www.starpipeproducts.com
Star Pipe Products	Star Grip 3000 (DI)	Mechanical	4" - 16"	Dec-2010	http://www.starpipeproducts.com
Star Pipe Products	Star Grip 4000 (PVC)	Mechanical	4" - 16"	Dec-2010	http://www.starpipeproducts.com
Tyler Union	Series 1000 Tufgrip for DIP	Mechanical	4" - 16"	Jan-2018	http://www.tylerunion.com
Tyler Union	Series 1500 Tufgrip Dual Wedge	Mechanical	4" - 16"	Jan-2018	http://www.tylerunion.com
Tyler Union	Series 2000 Tufgrip for PVC Pipe	Mechanical	4" - 16"	Jan-2018	http://www.tylerunion.com
Tyler Union	Series 3000PP PVC Pipe Bell Restraint	Mechanical	4" - 16"	Jan-2018	http://www.tylerunion.com
American	Fast-Grip	Gasket	4" - 16"		http://www.acipco.com
American	Flex-Ring	Gasket	4" - 16"		http://www.acipco.com
McWane Pipe	Sure Stop 350	Gasket	3" - 16"	Dec-2008	http://www.mcwanepipe.com/
Pacific States	Thrust-Lock	Gasket	4" - 12"		http://www.pscipco.com
Pacific States	MJ TJ	Gasket	16"		http://www.pscipco.com
U.S. Pipe	Field-Lok 350	Gasket	4" - 16"		http://www.uspipe.com

CITY OF HENDERSON APPROVED MATERIALS LIST

WATER MAIN PIPE OPTIONS

No thrust blocks shall be used on pipe above 12 inches in diameter.
Where required, an approved mechanical joint restraint must be used on all pipe larger than 12 inches.
Any pipe used on the discharge side of a fire pump must be minimum pressure class 200.
All ductile iron pipe shall be poly wrapped in a minimum of two wraps of 8 mils each for a total of 16 mils.
Ductile iron pipe will usually have a pressure class rating or a thickness class rating.

APPLICATION

Manufacturer	Model Number	Type	Pressure Class	Thickness Class	Size	Dimension Ratio	Approval Date	Manufacturer Web Link
Diamond Pipe Co	C 900	PVC	150		4" - 12"	DR 18	Apr-1995	http://www.dpcpipe.com
Vinyltech	C 900	PVC	150		4" - 12"	DR 18	Apr-1995	http://www.vtpipe.com
North American Pipe Corp.	C 900	PVC	150		4" - 12"	DR 18	Oct-1995	http://www.northamericanpipe.com/
Diamond Pipe Co	C 900	PVC	200		4" - 12"	DR 14	Apr-1995	http://www.dpcpipe.com
Vinyltech	C 900	PVC	200		4" - 12"	DR 14	Apr-1995	http://www.vtpipe.com
North American Pipe Corp.	C 900	PVC	200		4" - 12"	DR 14	Oct-1995	http://www.northamericanpipe.com/
American	Mechanical Joint Pipe	Ductile	350	Minimum 50	4" - 12"		Apr-1995	http://www.acipco.com
American	Fastite	Ductile	350	Minimum 50	4" - 12"		Apr-1995	http://www.acipco.com
McWane Ductile*	Tyton Joint	Ductile	350	Minimum 50	4" - 12"		Apr-1995	http://www.pscipco.com
McWane Ductile*	Mechanical Joint Pipe	Ductile	350	Minimum 50	4" - 12"		Apr-1995	http://www.pscipco.com
U.S. Pipe	Tyton Joint	Ductile	350	Minimum 50	4" - 12"		Apr-1995	http://www.uspipe.com
U.S. Pipe	TR Flex	Ductile	350		6" - 16"		Jun-2017	http://www.uspipe.com
American	Mechanical Joint Pipe	Ductile	250	Minimum 50	16"		Apr-1995	http://www.acipco.com
American	Fastite	Ductile	250	Minimum 50	16"		Apr-1995	http://www.acipco.com
McWane Ductile*	Tyton Joint	Ductile	250	Minimum 50	16"		Apr-1995	http://www.pscipco.com
McWane Ductile*	Mechanical Joint Pipe	Ductile	250	Minimum 50	16"		Apr-1995	http://www.pscipco.com
U.S. Pipe	Tyton Joint	Ductile	250	Minimum 50	16"		Apr-1995	http://www.uspipe.com
Griffin Pipe Products	Mechanical Joint Pipe	Ductile	250	Minimum 50	4" - 16"		Oct-2008	http://www.griffinpipe.com/

*Formerly Pacific States

CITY OF HENDERSON APPROVED MATERIALS LIST
WATER MAIN FITTING OPTIONS
This includes tees, bends, crosses, wyes, reducers, plugs and caps.
All water main fittings are required to be ductile Iron
and have a minimum working pressure rating of 250 psi.

APPLICATION

Manufacturer	Model Number	Size		Approval Date	Manufacturer Web Link
Clow		4" - 16"	Push-On & MJ Fittings		http://www.clowwatersystems.com
Sigma		4" - 16"	Push-On & MJ Fittings		http://www.sigmaco.com
Star Pipe Products		4" - 16"	Push-On & MJ Fittings		http://www.starpipeproducts.com
Tyler/Union		4" - 16"	Push-On & MJ Fittings		http://www.tylerpipe.com
U. S. Pipe		4" - 16"	Push-On & MJ Fittings		http://www.uspipe.com

CITY OF HENDERSON APPROVED MATERIALS LIST
WATER MAIN COUPLING OPTIONS

Dresser	38	4" - 12"			http://www.dressercouplings.com
Ford Meter Box	FC1	4" - 12"			http://www.fordmeterbox.com
Ford Meter Box	FC2W	6" - 16"	Wide Range Coupling	Jun-2017	http://www.fordmeterbox.com
PowerSeal	3506	4" - 16"			http://www.powerseal.com
Romac Industries, Inc.	501	4" - 16"			http://www.romac.com
Romac Industries, Inc.	XR501	4" - 12"			http://www.romac.com
Romac Industries, Inc.	Alpha and Alpha FC	4" - 12"	Wide Range Coupling - Approved for repairs, only. New installations to be reviewed on a case-by-case basis, and require approval from DUS.	Jul-2019	http://www.romac.com
Romac Industries, Inc.	Macro HP	4" - 12"	Extended Range Coupling - Approved for repairs, only. New installations to be reviewed on a case-by-case basis, and require approval from DUS.	Jul-2019	http://www.romac.com
Smith-Blair, Inc.	411	4" - 10"			http://www.smith-blair.com
Smith-Blair, Inc.	421	4" - 16"	Top Bolt Wide Range Coupling	May-2017	http://www.smith-blair.com
Smith-Blair, Inc.	441	4" - 16"			http://www.smith-blair.com
U. S. Pipe	210	4" - 12"			http://www.uspipe.com

CITY OF HENDERSON APPROVED MATERIALS LIST
VALVE BOX & LID OPTIONS
The minimum valve can lid weight is 14 pounds for a 4" skirt and 16 pounds for a 2" skirt.
The minimum valve can lid weight for a Right-of-Way larger than 60 feet is 22 pounds.

			APPLICATION					
Manufacturer	**Item**	**Model Number**	**Approved For All Applications**	**Approved For 60' Right-of-Way And Smaller**	**Lid Skirt Length**	**Lid Weight**	**Approval Date**	**Manufacturer Web Link**
Bingham & Taylor	Valve Box Lid	CUL5LHVTSK4W	●	●	4"	25 lbs	Oct-2006	http://www.binghamandtaylor.com
D & L Foundry & Supply	Valve Box Lid	M-8045-1		●	4"	14 lbs	Oct-2006	http://www.dlfoundry.us
D & L Foundry & Supply	Valve Box Lid	M-8045-3	●	●	6"	25 lbs	Oct-2009	http://www.dlfoundry.us
East Jordan Iron Works	Valve Box Lid	6800045	●	●	4"	23 lbs	Oct-2006	http://www.ejiw.com
East Jordan Iron Works	Valve Box Lid	6800007		●	2"	17 lbs	Oct-2006	http://www.ejiw.com
NEENAH	Valve Box Lid	1913		●	4"	14 lbs	Oct-2006	http://www.nfco.com
Sigma	Valve Box Lid	VB 2600WLV-35		●	4"	15 lbs	Oct-2006	http://www.sigmaco.com
Star Pipe Products	Valve Box Lid	VBLIDLV		●	4"	16.5 lbs	Oct-2006	http://www.starpipeproducts.com
Tyler Union	Valve Box Lid	25#	●		4"	25 lbs	Jan-2018	http://www.tylerunion.com
Bingham & Taylor	Valve Boxes	15B20	●				Oct-2006	http://www.binghamandtaylor.com
D & L Foundry & Supply	Valve Box - Upper	M-8058	●				Oct-2006	http://www.dlfoundry.us
D & L Foundry & Supply	Valve Box - Lower	M-8064	●				Oct-2006	http://www.dlfoundry.us
East Jordan Iron Works	Valve Boxes	562-A	●				Oct-2006	http://www.ejiw.com
Star Pipe Products	Valve Boxes	564-A	●				Oct-2006	http://www.starpipeproducts.com
Tyler	Valve Boxes	6855	●				Oct-2006	http://www.tylerpipe.com

CITY OF HENDERSON APPROVED MATERIALS LIST
BACKFLOW ASSEMBLY OPTIONS

Any backflow assembly listed on the most current Foundation for Cross-Connection Control
and Hydraulic Research at the University of Southern California (USC) list of
approved backflow assemblies is acceptable for use within the City of Henderson.
All backflow assembly valves 3" and larger are required to be an Outside Stem & Yoke (OS&Y) configuration.
All City of Henderson backflow assemblies installed are privately owned and maintained.
Review the most current UDACS Table E and NAC 445A.67185 - 445A.6724
for requirements of each application.

CITY OF HENDERSON BACKFLOW ENCLOSURE OPTIONS

All enclosures are required to have ASSE 1060 Class II certification.
(freeze retardant enclosures with insulation)
All enclosures are required to have a manufacturer label
showing manufacturer name and model number.

APPLICATION					
Manufacturer	**Model Number**	**Type**	**Size**	**Approval Date**	**Manufacturer Web Link**
HydroCowl				Oct-2006	http://safe-t-cover.com
Hot Box				May-2004	http://www.hubbellpowersystems.com/about/hotbox/
G&C				Oct-2006	http://www.gcenclosures.com
Safe-T-Cover				Oct-2006	http://safe-t-cover.com

CITY OF HENDERSON APPROVED MATERIALS LIST
WATER SERVICE TUBING OPTIONS
UDACS Plates 1 and 3 are the only water service configurations used within the City.

APPLICATION

Manufacturer	Model Number	Type	Size	Approval Date	UDACS Plate	Manufacturer Web Link
Wieland Copper Products, LLC		Type K Copper	1" - 2"	Apr-1995	1 or 3	http://www.wielandcopper.com
Cambridge-Lee		Type K Copper	1" - 2"	Apr-1995	1 or 3	http://www.camlee.com
Cerro		Type K Copper	1" - 2"	Apr-1995	1 or 3	http://www.cerroflow.com
Mueller Company, LLC	Streamline	Type K Copper	1" - 2"	Apr-1995	1 or 3	http://www.muellercompany.com
Mueller Industries, Inc.	PlumbShield	Plastic Coated Copper	1" - 2"	Jun-2013	1 or 3	http://www.muellerindustries.com/

CITY OF HENDERSON WATER SERVICE BRASS OPTIONS
UDACS plates 1 and 3 are the only water service configurations used within the City.

A.Y. McDonald				Jan-2001		http://www.aymcdonald.com
Cambridge				May-2004	1 or 3	http://www.cambridgebrass.com
Ford Meter Box				Apr-1995	1 or 3	http://www.fordmeterbox.com
James Jones				Apr-1995	1 or 3	http://www.jamesjones.com
Mueller Company, LLC				Apr-1995		http://www.muellercompany.com

CITY OF HENDERSON APPROVED MATERIALS LIST

SEWER MAIN PIPE OPTIONS

Any sewer main not meeting minimum cover required by the standards shall be either C 900 PVC or Epoxy lined Ductile, as required by the City.

Any ductile iron pipe used for a sewer application is required to have a manufacturer-applied epoxy lining.

Any sewer main deeper than 20 feet shall be a minimum C-900 pipe.

All ductile iron pipe shall be poly wrapped in a minimum of two wraps of 8 mils each for a total of 16 mils.

APPLICATION

Manufacturer	Model Number	Type	Pressure Class	Size	Dimension Ratio	Approval Date	Manufacturer Web Link
Diamond Pipe Co	SDR 35	PVC		4" - 15"		Apr-1995	http://www.dpcpipe.com
Vinyltech	SDR 35	PVC		4" - 15"		Apr-1995	http://www.vtpipe.com
North American Pipe Corp.	SDR 35	PVC		4" - 12"		Oct-2008	http://www.northamericanpipe.com/
Diamond Pipe Co	C 900	PVC	150	4" - 12"	DR 18	Apr-1995	http://www.dpcpipe.com
Vinyltech	C 900	PVC	150	4" - 12"	DR 18	Apr-1995	http://www.vtpipe.com
GPK Products, Inc	Fittings	PVC			SDR-35	Dec-2009	http://www.gpk-fargo.com/
Tigre-ADS USA	Fittings (Gasketed Only)	PVC			SDR-35	Jul-2015	www.tigreadsusa.com
Any ductile iron pipe used for a sewer application is required to be epoxy lined.							
American	Mechanical Joint Pipe	Ductile	350	4" - 12"		Apr-1995	http://www.acipco.com
American	Fastite	Ductile	350	4" - 12"		Apr-1995	http://www.acipco.com
McWane Ductile*	Tyton Joint	Ductile	350	4" - 12"		Apr-1995	http://www.pscipco.com
McWane Ductile*	Mechanical Joint Pipe	Ductile	350	4" - 12"		Apr-1995	http://www.pscipco.com
U.S. Pipe	Tyton Joint	Ductile	350	4" - 12"		Apr-1995	http://www.uspipe.com
Griffin Pipe Products	Mechanical Joint Pipe	Ductile	350	4" - 12"		Oct-2008	http://www.griffinpipe.com/
The two epoxy products approved for ductile sewer pipe lining are: PROTECTO 401 and SP-2000M							

*Formerly Pacific States

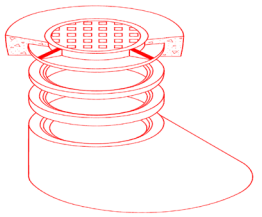

SANITARY SEWER MANHOLE OPTIONS

The standard manhole lid configuration is a 30" rough opening with a frame and a 24" lid.
All sanitary sewer lids shall have CITY OF HENDERSON SANITARY SEWER cast into the lid.
All manhole frame openings shall be a minimum 21" clear.
All manhole lid and frame components shall have a minimum H-20 load rating.
Steps within manholes are no longer required or authorized.

APPLICATION

Manufacturer	Item	Model Number	Size	Size	Lid Weight	Approval Date	Manufacturer Web Link
Geneva Pipe	Precast Manhole Components		48"	60"		Apr-1995	http://www.geneva-pipe.com
Jensen Precast	Precast Manhole Components		48"	60"		Apr-1995	http://www.jensenprecast.com
Olson Precast	Precast Manhole Components		48"	60"		Apr-1995	http://www.olsonprecastcompany.com
Oldcastle Precast	Precast Manhole Components		48", 60", 72"			Oct-2017	http://www.oldcastle.com/
Geneva Polymer Products	Polymer Manhole		48" - 96"			Aug-2013	http://genevapolymerproducts.com/
Alhambra Foundry	Manhole Frame & Cover	A-1310	24"		170 lbs	Apr-1995	http://www.alhambrafoundry.com
D&L Foundry & Supply	Manhole Frame & Cover	1180	24"		142 lbs	Apr-1995	http://www.dlfoundry.us
D&L Foundry & Supply	Cover within a Cover & Frame	A-1425	24" within a 36"			Apr-1995	http://www.dlfoundry.us
D&L Foundry & Supply	Manhole Frame & Cover	A-1075	24"		134 lbs	Dec-2019	http://www.dlfoundry.us
D&L Foundry & Supply	Manhole Frame & Cover	A-1366	32"			Dec-2019	http://www.dlfoundry.us
D&L Foundry & Supply	Cover within a Cover & Frame	A-1425	24" within a 36"		142 lbs	Dec-2019	http://www.dlfoundry.us
East Jordan Iron Works	Manhole Frame & Cover		24"		190 lbs	Oct-2006	http://www.ejiw.com
East Jordan Iron Works	Cover within a Cover & Frame		24" within a 36"		180/195 lbs	Oct-2006	http://www.ejiw.com
National Casting Corporation	Cover within a Cover & Frame	NC-2531R	24" within a 36"		147/314	Jul-2015	
South Bay Foundry	Manhole Frame & Cover	SBF-1310	24"		155 lbs	Apr-1995	http://www.southbayfoundry.com/
South Bay Foundry	Cover within a Cover & Frame	SBF-1325	24" within a 36"		155/320 lbs	Apr-1995	http://www.southbayfoundry.com/
	MANHOLE LINING SYSTEMS All lining systems shall be applied by a manufacturer certified contractor according to the manufacturer's recommendations. All lining systems require a copy of the certified spark test be supplied to the City of Henderson inspector.						
Raven Lining System						Oct-2006	http://www.ravenlining.com
Quadex	Epoxy Manhole Lining System	Structure Guard Series				Apr-2019	http://www.ravenlining.com
Sauereisen Lining system						Oct-2006	http://www.sauereisen.com
Poly-Triplex Lining System						Oct-2006	http://www.poly-triplex.com
COR-Guard Epoxy Lining System						Dec-2008	http://www.corguard.net/index-2.html
Warren Enviornmental	Epoxy Coating	S-301				Dec-2013	http://www.warrenenviro.com/

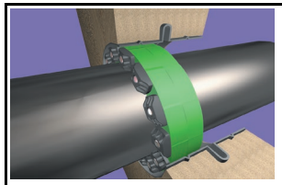

CITY OF HENDERSON APPROVED MATERIALS LIST
SEWER MANHOLE & PIPE ACCESSORY OPTIONS
All bolt assemblies and clamps shall be stainless steel.
All pipe penetrations, 15 inches and smaller into an existing manhole, shall be core drilled.

APPLICATION

Manufacturer	Description	Comments	Approval Date	Manufacturer Web Link
KOR-N-SEAL I	Pipe to manhole connectors		Apr-1995	http://www.trelleborg.com/en/Pipe-Seals-Milford/
Link-Seal	Modular Seal		Oct-2006	http://www.linkseal.com/
Multi Fittings	Pipe Fittings		Oct-2006	http://www.multifittings.com/Content/General/Home.aspx
Newby Rubber	Manhole Stop Rings	Used with cast-in-place manholes only	Oct-2006	http://www.newbyrubber.com/
Plastic Trends	Pipe Fittings		Oct-2006	http://www.plastictrends.com/
Press-Seal	Press-Boot pipe to manhole connector with glass reinforced nylon expansion ring		Apr-1995	http://www.press-seal.com/
Press-Seal	PSX Positive Seal pipe to manhole connector		Apr-1995	http://www.press-seal.com/
Specified Fittings	Gasketed Sewer Fittings	Models 79349, 79350, 79920	Apr-2020	https://specifiedfittings.com/

CITY OF HENDERSON APPROVED MATERIALS LIST
MISCELLANEOUS ITEMS

APPLICATION

Manufacturer	Model Number	Description	Size	Comments	Approval Date	Manufacturer Web Link
A.Y. McDonald	6109BQ	Blow-Off/Flushing Valve	2"	UDACS Plate 36	Oct-2006	http://www.aymcdonald.com
Jones	J1998	Blow-Off/Flushing Valve	2"	UDACS Plate 36	Oct-2006	http://www.jamesjones.com/
Kupferly Foundry	TF550	Blow-Off/Flushing Valve	2"	UDACS Plate 36	Oct-2006	http://www.hydrants.com/
APCO/Willamette	143C	Combination Air Valve	1"	Fusion bonded epoxy coated with all stainless steel internal parts	Oct-2006	http://www.apcovalves.com
APCO/Willamette	145C	Combination Air Valve	2"	Fusion bonded epoxy coated with all stainless steel internal parts	Oct-2006	http://www.apcovalves.com
APCO/Willamette	149C	Combination Air Valve	4"	Fusion bonded epoxy coated with all stainless steel internal parts	Oct-2006	http://www.apcovalves.com
A.R.I.	D-040	Combination Air Valve	1" & 2"		Jun-2007	http://www.airvalves.com/
A.R.I.	D-060, D-060-C-HF	Combination Air Valve	4" & 6"	Must have 22 or 24 mesh stainless steel outer screen installed for discharge	Apr-2018	http://www.airvalves.com/
Val-Matic	201C.2	Combination Air Valve	1"	Fusion bonded epoxy coated with all stainless steel internal parts	Oct-2006	http://www.valmatic.com
Val-Matic	202C.2	Combination Air Valve	2"	Fusion bonded epoxy coated with all stainless steel internal parts	Oct-2006	http://www.valmatic.com
Val-Matic	204C.2	Combination Air Valve	4"	Fusion bonded epoxy coated with all stainless steel internal parts	Oct-2006	http://www.valmatic.com
Armorcast	P6002001B	Air Valve Enclosure		Per UDACS Plate 38	Jul-2019	http://www.armorcastprod.com/
Armorcast	P6002002B	Air Valve Enclosure		Per UDACS Plate 38	Jul-2019	http://www.armorcastprod.com/
Armorcast	P6002003B	Air Valve Enclosure		Per UDACS Plate 38	Jul-2019	http://www.armorcastprod.com/
Steel fabricated	Steel fabricated	Air Valve Enclosure		Per UDACS Plate 38		http://fabricatedsteel.net/
Hot Box	Vent Guard	Air Valve Enclosure			Oct-2006	http://www.hot-box.com
Pipeline Products	1424 & 1830	Air Valve Enclosure		Neutral earth tone colors only	Sep-2007	http://pipelineproducts.com/main/
Presto Products		Geoblock		Used with an alternative pavement system for sewer and water main access.	Oct-2006	http://www.prestoproducts.com
Jensen Precast	G5	Valve Box	2"	For use with a 2" blow-off valve	Oct-2008	http://www.jensenprecast.com/
Cla-Val	CRD-L	PRV	3/4", 1", 1-1/4", 1-1/2", 2"		Oct-2017	http://www.cla-val.com/